Model No. VC1310L VACUUM CLEANER

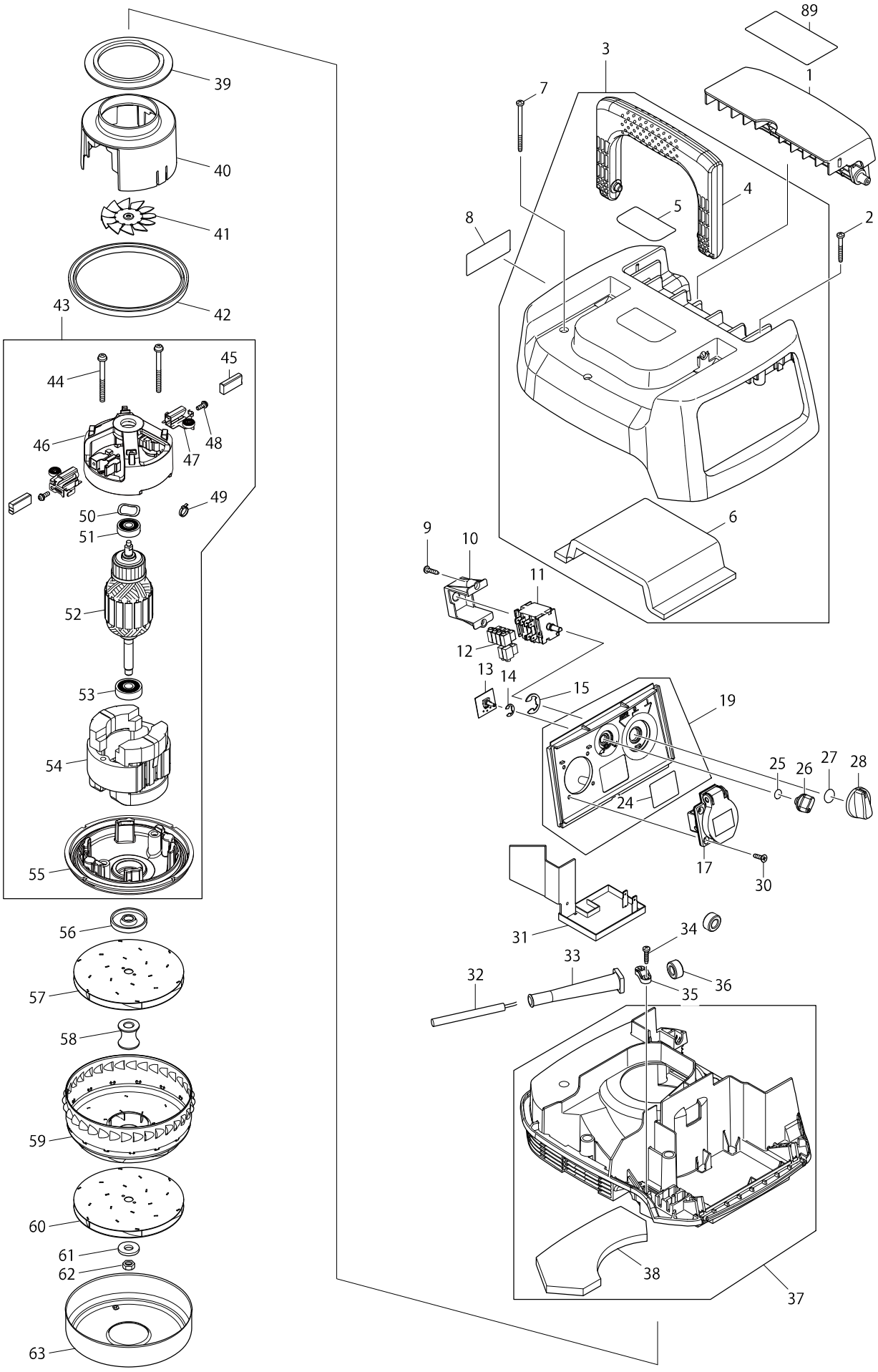

Model No. VC1310L VACUUM CLEANER

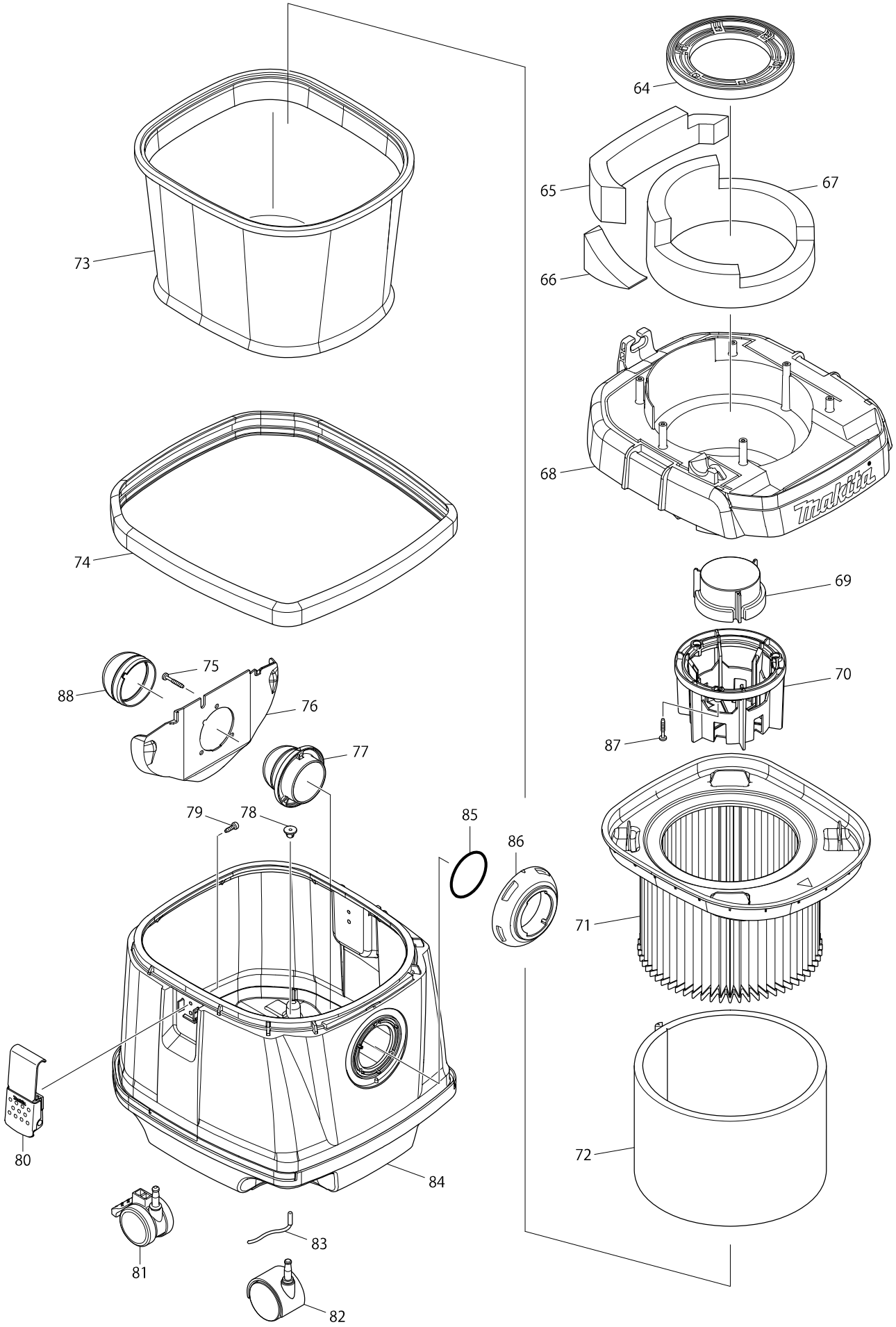

Model No. VC1310L VACUUM CLEANER

Item	Parts No.	Description	I/C	QTY	N/O	Opt. 1	Opt. 2	NOTE
001	452451-7	BASE HOOK		1				
002	266053-1	TAPPING SCREW 4X35		3				
003	140751-4	COWLING COMPLETE		1				
D10		INC. 4-6						
004	451340-3	GRIP		1				
005	891977-8	CAUTION LABEL		1				
006	423393-2	TOP DAMPER		1				
007	266060-4	TAPPING SCREW 4X65		3				
008	869042-1	VC1310L NAME PLATE		1				
009	265995-6	TAPPING SCREW 4X18		2				
010	451343-7	SWITCH HOLDER		1				
011	650623-0	SWITCH		1				
012	686023-8	RECEPTACLE SLEEVE		6				
013	631922-9	SUB CONTROLLER		1				
014	961013-5	STOP RING E-7		1				
015	961062-2	STOP RING E-12		1				
017	655117-0	OUTLET		1	*			
017-1	655123-5	OUTLET	S	1				
018	685740-7	RUBBER SHEET	S	1				
019	140742-5	SWITCH BASE COMPLETE		1	*			
D10		INC. 24			*			
019-1	141108-2	SWITCH BASE COMPLETE	X	1				
D10		INC. 24						
024	891982-5	CAUTION LABEL		1	*			
024-1	893528-3	CAUTION LABEL	X	1				
025	213054-0	O RING 9		1				
026	451344-5	SWITCH DIAL		1				
027	213176-6	O RING 14		1				
028	451342-9	SWITCH LEVER		1				
030	266630-9	+COUNTERSUNK TAPPING SCREW4X		4				
031	620033-5	CONTROLLER		1				
032	695350-2	POWER SUPPLY CORD 1.5-3-5.0		1				
033	682575-7	CORD GUARD 12-90		1				
034	265999-8	TAPPING SCREW 4X25		2				
035	687149-9	STRAIN RELIEF		1				
037	140254-8	SEPARATOR COMPLETE		1				
D10		INC. 38						
038	423395-8	BOTTOM DAMPER		1				
039	423279-0	SEAL RING 70		1				
040	451338-0	MOTOR COVER		1				
041	241512-6	FAN 62		1				
042	424228-0	RUBBER RING 120		1				
043	125876-5	MOTOR ASSEMBLY		1				
C10	213406-5	O RING 30	S	1				
D10		INC. 44-50,52,54,55						
044	911283-6	PAN HEAD SCREW M5X60		2				
045	195489-6	CARBON BRUSH CB-173		1				
046	452106-4	ENDBELL		1				

Model No. VC1310L VACUUM CLEANER

Item	Parts No.	Description	I/C	QTY	N/O	Opt. 1	Opt. 2	NOTE
047	643610-6	BRUSH HOLDER 6.5X13.5		2				
048	911118-1	PAN HEAD SCREW M4X12		2				
049	687010-0	BAND		1				
050	267715-4	WAVE WASHER 20		1				
051	211092-6	BALL BEARING 629DDW		1				
052	517849-6	ARMATURE ASS'Y 240V		1				
D10		INC. 51,53						
053	211087-9	BALL BEARING 6200DDW		1				
054	526204-1	FIELD ASS'Y 240V		1				
C10	654304-8	RECEPTACLE		2				
055	452105-6	BASE		1	*			
055-1	454480-6	BASE	S	1				
056	316795-8	FLANGE		1				
057	241910-4	FAN 125		1				
058	325747-8	SPACER		1				
059	346114-4	RETURN VANE		1				
060	241910-4	FAN 125		1				
061	316799-0	FLAT WASHER 10		1				
062	931403-6	HEX. NUT M8		1				
063	346115-2	FAN COVER		1				
064	424229-8	SUPPORT RING		1				
065	423396-6	REAR BLOCK FILTER		1				
066	423399-0	SIDE BLOCK FILTER		1				
067	423397-4	BAND DAMPER		1				
068	140251-4	TANK COVER COMPLETE		1				
069	141019-1	FLOAT COMPLETE		1				
C10	423365-7	SPONGE SEAL 70		1				
070	452446-0	FLOAT CAGE		1				
071	195438-3	POWDER FILTER SET		1				
072	424377-3	DAMPER		1				
073	A-50485	PRE-FILTER COMPLETE		1	*			
073-1	140253-0	PRE-FILTER COMPLETE	O	1				
074	424230-3	BUMPER		1				
075	266257-5	TAPPING SCREW 4X28		3				
076	419351-4	HOLDER PLATE		1				
077	419350-6	HOLDER		1				
078	421468-1	CORD SEAL		1				
079	266192-7	TAPPING SCREW 4X14		4				
080	168537-4	HOOK		2				
081	168535-8	CASTER 50		2				
082	168434-4	CASTER 50		2				
083	649150-2	EARTH LINE 120		1				
084	452291-3	TANK		1				
085	213655-4	O RING 56		1				
086	451348-7	INLET		1				
087	265999-8	TAPPING SCREW 4X25		3				
088	424382-0	RUBBER HOLDER		1				
A01	195433-3	HOSE COMPLETE 28-3.5 SET		1				

Model No. VC1310L VACUUM CLEANER

Item	Parts No.	Description	I/C	QTY	N/O	Opt. 1	Opt. 2	NOTE
D10		INC. A02,A03						
A02	417765-1	FRONT CUFF 22		1				
A03	424379-9	FRONT CUFF 24		1				
A04	417764-3	HOLDER 10-33		4				
A05	195432-5	POLY BAG SET		1				
A06	195439-1	CLEANING SET		1				
D10		INC. A07-A10						
A07	195434-1	HOSE COMPLETE 38-2.5 SET		1				
A08	192563-1	STRAIGHT PIPE		1				
A09	192562-3	BENDING PIPE		1				
A10	410306-2	CORNER NOZZLE		1				
A11	451350-0	STOPPER		1				
A12	451354-2	PIPE HOLDER		1				
A13	911138-5	PAN HEAD SCREW M4X20		1				