Model No. UB1101 BLOWER

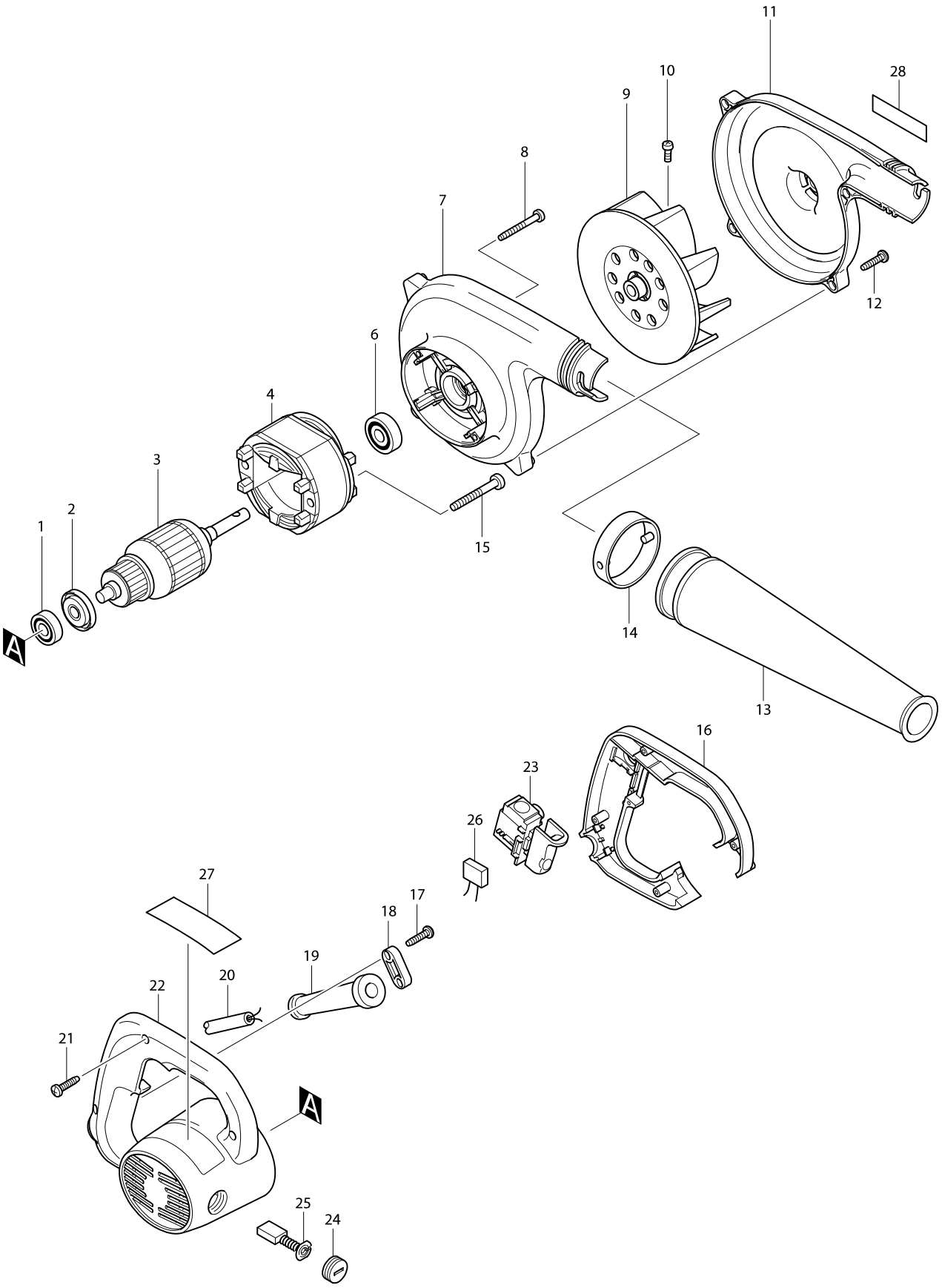

Model No. UB1101 BLOWER

Item	Parts No.	Description	I/C	QTY	N/O	Opt. 1	Opt. 2	NOTE
001	210005-4	BALL BEARING 608DDW		1				
002	681644-1	INSULATION WASHER		1				
003	516478-2	ARMATURE ASS'Y 220-240V		1				
D10		INC. 1,2,6						
004	594438-4	FIELD ASS'Y 220-240V		1				
C10	654020-2	RING TERMINAL		2				
C20	654501-6	CONNECTOR P-1.25		2				
006	211092-6	BALL BEARING 629DDW		1				
007	152902-7	FAN HOUSING COMPLETE		1				
008	266053-1	TAPPING SCREW 4X35		4				
009	241888-1	FAN 110		1				
010	911117-3	PAN HEAD SCREW M4X12		1				
011	183389-2	FAN COVER		1	*			
D10		INC. 28			*			
011-1	417655-8	FAN COVER	O	1				
012	265995-6	TAPPING SCREW 4X18		4				
013	132025-7	NOZZLE ASS'Y		1				
D10		INC. 14						
014	414145-2	JOINT		1				
015	266211-9	TAPPING SCREW 5X40		2				
016	417657-4	HANDLE COVER		1				
017	265995-6	TAPPING SCREW 4X18		2				
018	687053-2	STRAIN RELIEF		1	*			
018-1	687140-7	STRAIN RELIEF	O	1				
019	682504-0	CORD GUARD 10-85		1				
020	691015-4	POWER SUPPLY CORD 0.75-2-2.5		1				
021	265995-6	TAPPING SCREW 4X18		4				
022	152903-5	MOTOR HOUSING COMPLETE		1				
C10	643708-9	BRUSH HOLDER 5-11		2				
023	651298-8	SWITCH TG813AB-1		1				
024	643755-0	BRUSH HOLDER CAP 7-11		2				
025	191963-2	CARBON BRUSH CB-303		1	*			
025-1	194996-6	CARBON BRUSH CB-303	<	1				
027	853405-1	NAME PLATE UB1101		1				
028	819063-3	MAKITA LABEL		1	*			
A01	122321-1	DUST BAG ASS'Y		1				
C10	410602-8	FASTENER		1				

Please order the parts with a part number.

Print Date 2018/04/19