Model No. DP2010 6.5MM HIGH SPEED DRILL

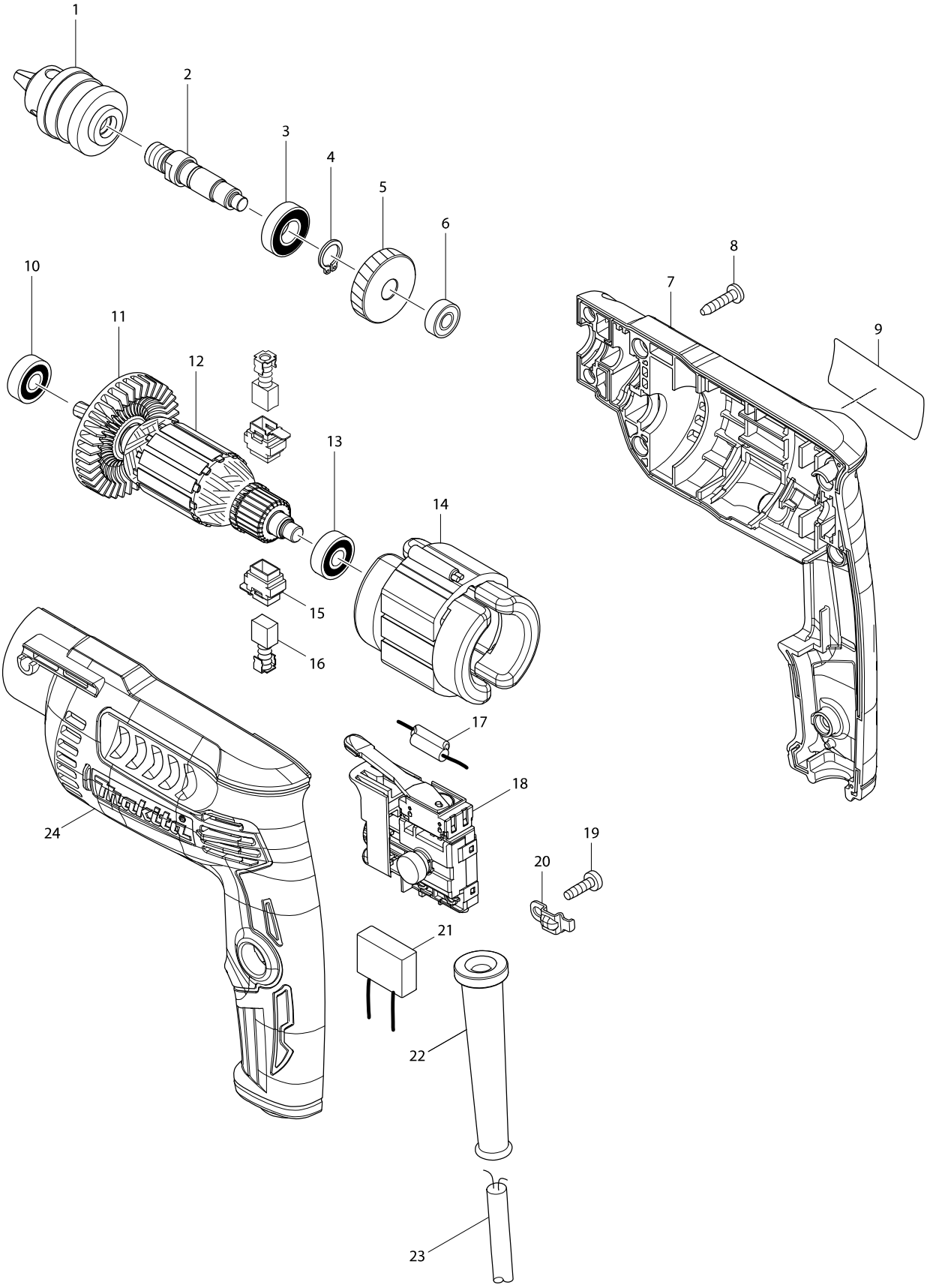

Model No. DP2010 6.5MM HIGH SPEED DRILL

Item	Parts No.	Description	I/C	QTY	N/O	Opt. 1	Opt. 2	NOTE
001	763077-3	DRILL CHUCK 6.5		1				
002	326280-3	SPINDLE		1				
003	210087-6	BALL BEARING 6900LLB		1				
004	961006-2	RETAINING RING S-10		1				
005	227776-6	HELICAL GEAR 34		1				
006	210033-9	BALL BEARING 696ZZ		1				
007	187620-8	HOUSING SET		1				
C10	252175-3	HEX. NUT M5		1				
D10		INC. 24						
008	266326-2	TAPPING SCREW 4X18		7				
009	814K58-7	DP2010 NAME PLATE		1				
010	210017-7	BALL BEARING 607DDW		1				
011	240066-0	FAN 52		1				
012	517694-9	ARMATURE ASS'Y 240V		1				
D10		INC. 10,11,13						
013	210062-2	BALL BEARING 607ZZ		1				
014	527078-3	FIELD ASS'Y 240V		1				
C10	654069-2	RECEPTACLE		1				
015	643936-6	BRUSH HOLDER		2				
016	195015-1	CARBON BRUSH CB-419		1				
018	650706-6	SWITCH		1				
019	266385-6	TAPPING SCREW 4X14		1				
020	687682-1	STRAIN RELIEF		1				
022	682504-0	CORD GUARD 10-85		1				
023	691005-7	POWER SUPPLY CORD 0.75-2-2.0		1				
024	187620-8	HOUSING SET		1				
C10	252175-3	HEX. NUT M5		1				
D10		INC. 7						
A01	418198-3	KEY HOLDER 9		1				
A02	763418-3	CHUCK KEY S10		1				
A03	196322-5	DEPTH GAUGE SET		1				
C10	265761-1	THUMB SCREW M5X16		1				
C20	286224-4	CAP 12		1				
C30	322177-4	DEPTH ROD		1				
C40	343525-4	STOPPER POLE RETAINER		1				

Please order the parts with a part number.

Print Date 2018/04/02