Model No. DF457D CORDLESS DRIVER DRILL

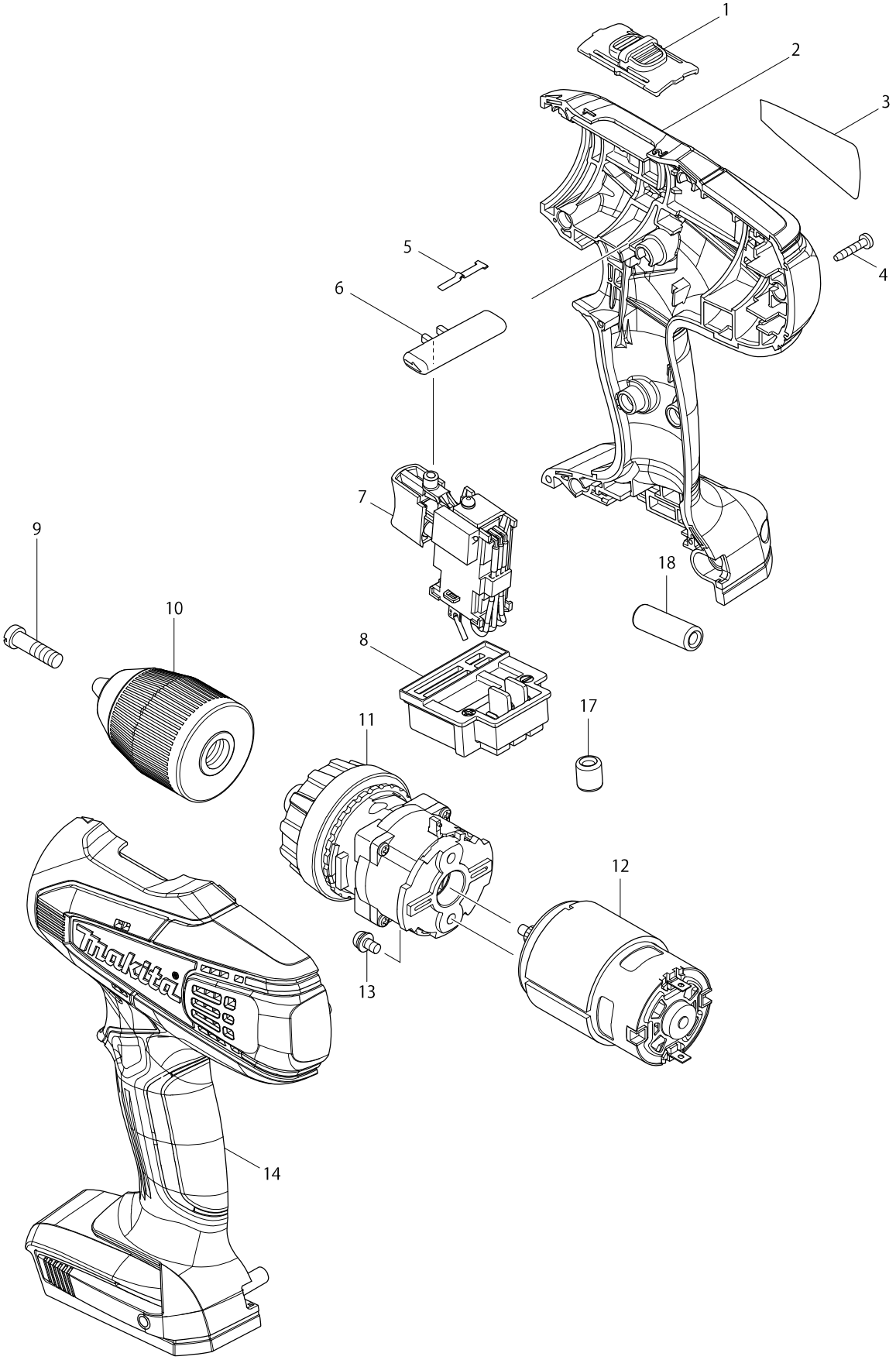

Model No. DF457D CORDLESS DRIVER DRILL

Item	Parts No.	Description	I/C	QTY	N/O	Opt. 1	Opt. 2	NOTE
001	125310-5	SPEED CHANGE LEVER ASS'Y		1				
C10	231433-0	COMPRESSION SPRING 4		2				
002	187026-0	HOUSING SET		1				
D10		INC. 14						
003	869383-5	DF457D NAME PLATE		1				
004	266429-2	TAPPING SCREW 3X16		9				
005	232182-2	LEAF SPRING		1				
006	452399-3	F/R CHANGE LEVER		1				
007	638887-6	SWITCH UNIT		1				
008	643862-9	TERMINAL		1				
009	251468-5	- FLAT HEAD SCREW M6X22		1				
010	766004-9	KEYLESS DRILL CHUCK 13		1	*			
010-1	766004-9	KEYLESS DRILL CHUCK 13	O	1				
011	125483-4	GEAR ASS'Y		1				
012	629834-8	DC MOTOR		1	*			
012-1	629937-8	DC MOTOR	O	1				
013	911108-4	PAN HEAD SCREW M4X8		2				
014	187026-0	HOUSING SET		1				
D10		INC. 2						
A01	784636-0	+- BIT 2-65		1				
A02	***DC18WA	DC18WA BATTRY CHARGER		1				
A03A	195454-5	BATTERY BL1811G SET		2	*			
A03B	195454-5	BATTERY BL1811G SET		1	*			
A03-1A	196367-3	BATTERY BL1813G SET	O	2	*			
A03-1B	196367-3	BATTERY BL1813G SET	O	1	*			
A03-2A	196367-3	BATTERY BL1813G SET	O	2				
A03-2B	196367-3	BATTERY BL1813G SET	O	1				
A04A	452652-7	BATTERY COVER		1				
A05	824981-2	PLASTIC CARRYING CASE		1				
C10	162315-4	LATCH		2				
C20	452137-3	HANDLE		1				
A06A	892774-5	DF457DWE PLASTIC CASE LABEL		2				
A06B	801V50-8	DF457DW PLASTIC CASE LABEL		2				

Please order the parts with a part number.

Print Date 2018/04/02