# Model No. 6501  HIGH SPEED DRILL 6.5MM

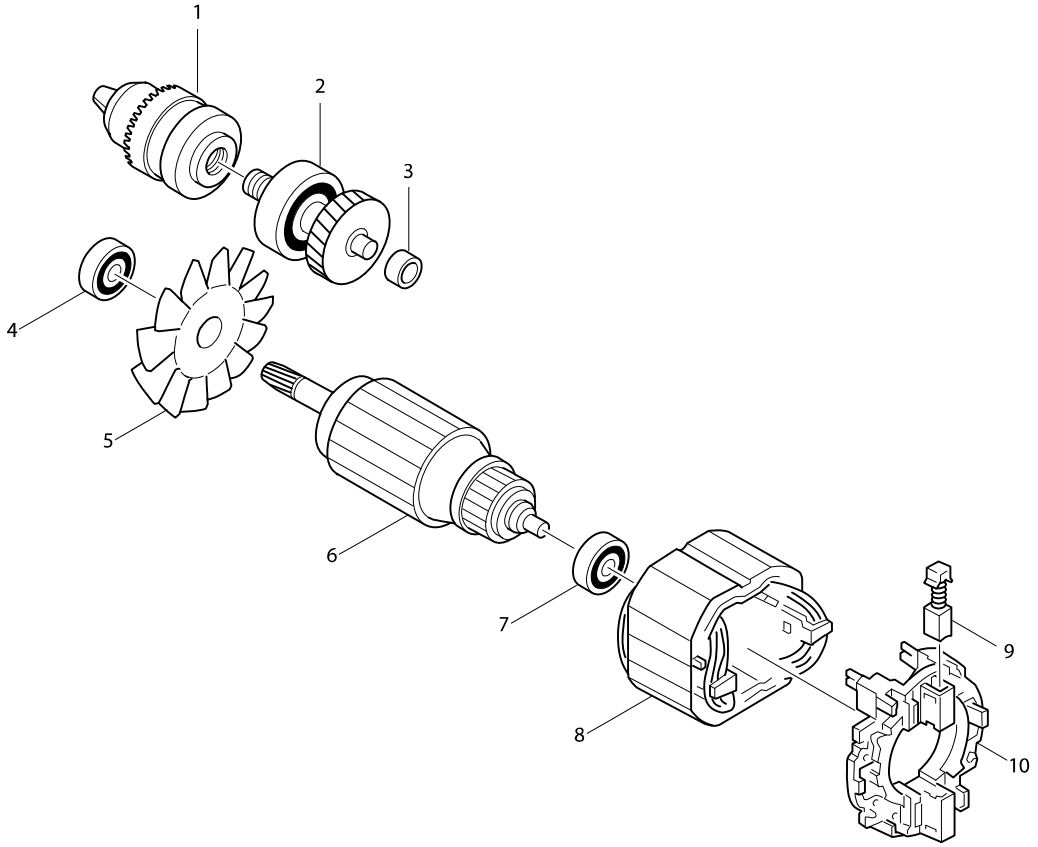


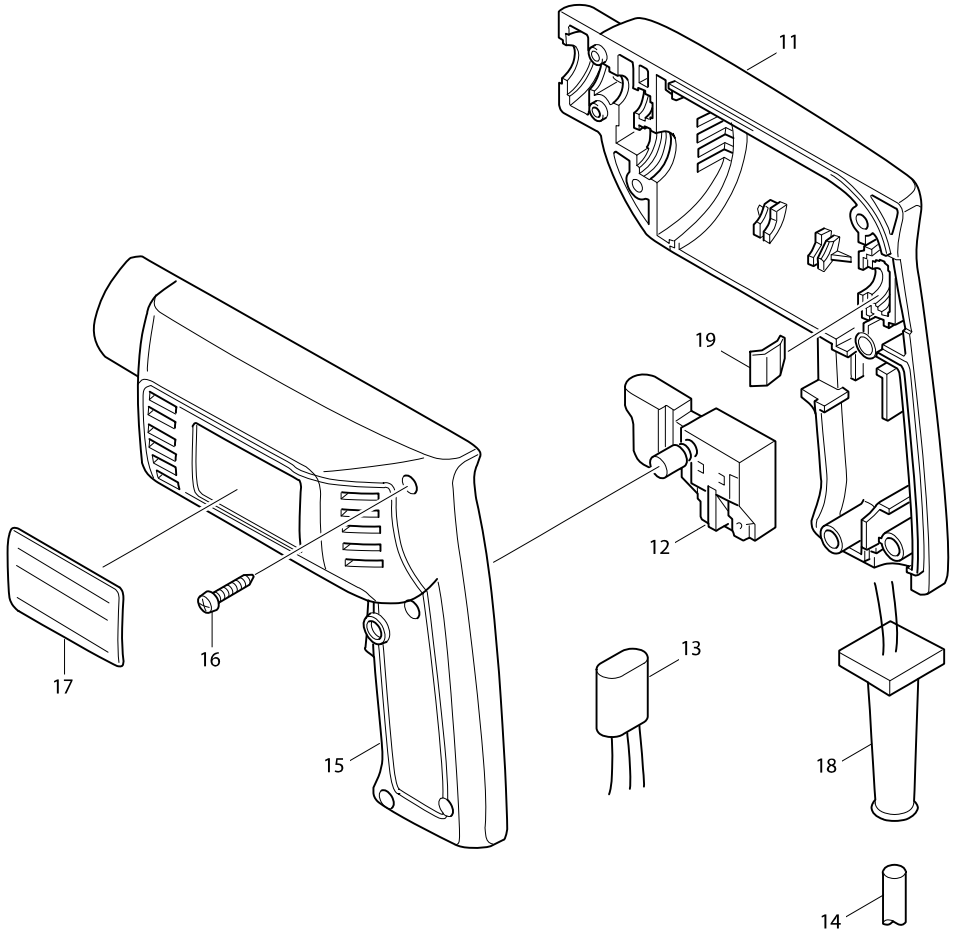

# Model No. 6501 HIGH SPEED DRILL 6.5MM



| Item | Parts No. | Description | I/C | QTY | N/O | Opt. 1 | Opt. 2 | NOTE |
|---|---|---|---|---|---|---|---|---|
| 001-1 | 192887-5 | DRILL CHUCK | | 1 | | | | |
| 002 | 153178-9 | GEAR COMPLETE | | 1 | | | | |
| 003 | 214017-9 | PLANE BEARING 5 | | 1 | | | | |
| 004 | 211018-8 | BALL BEARING 626LB | | 1 | * | | | |
| 004-1 | 211016-2 | BALL BEARING 626LLB | O | 1 | | | | |
| 005 | 241508-7 | FAN 52 | | 1 | | | | |
| 006C1 | 517033-3 | ARMATURE ASS'Y 220V | | 1 | | | | |
| D10 | | INC. 4,5,7 | | | | | | |
| 007 | 211018-8 | BALL BEARING 626LB | | 1 | * | | | |
| 007-1 | 211016-2 | BALL BEARING 626LLB | O | 1 | | | | |
| 008C_ | 633033-6 | FIELD 220V | | 1 | | | | |
| 009 | 191914-5 | CARBON BRUSH CB-70 | | 1 | * | | | |
| 009-1 | 194970-4 | CARBON BRUSH SET CB-70 | < | 1 | | | | |
| 010-1 | 632073-1 | TERMINAL BASE COMPLETE 55C | | 1 | | | | |
| 011-4 | 183067-4 | HOUSING SET | O | 1 | * | | | |
| D10 | | INC. 15 | | | * | | | |
| 011-5 | 183209-0 | HOUSING SET | S | 1 | | | | |
| D10 | | INC. 15 | | | | | | |
| 012 | 651242-5 | SWITCH SGEL106C-1 | | 1 | * | | | |
| 012-1 | 650223-6 | SWITCH SGEL115CD-4 | S | 1 | | | | |
| 014N_ | 691055-2 | POWER SUPPLY CORD 0.75-2-2.0 | | 1 | | | | |
| 015-4 | 183067-4 | HOUSING SET | O | 1 | * | | | |
| D10 | | INC. 11 | | | * | | | |
| 015-5 | 183209-0 | HOUSING SET | S | 1 | | | | |
| D10 | | INC. 11 | | | | | | |
| 016-1 | 265874-8 | TAPPING SCREW BT 4X20 | | 6 | | | | |
| 017 | 856067-4 | NAME PLATE 6501 | | 1 | | | | |
| 018 | 682502-4 | CORD GUARD 8-85 | | 1 | | | | |
| 019 | 232100-0 | LEAF SPRING | | 1 | | | | |
| 020 | 265995-6 | TAPPING SCREW 4X18 | | 2 | | | | |
| 021 | 687052-4 | STRAIN RELIEF | | 1 | | | | |
| 400 | 286224-4 | CAP 12 | | 1 | | | | |
| 401 | 322177-4 | DEPTH ROD | | 1 | | | | |
| 402 | 343525-4 | STOPPER POLE RETAINER | | 1 | | | | |
| 403 | 924221-9 | WING BOLT M5X18 | | 1 | | | | |
| 404 | 763418-3 | CHUCK KEY S10 | | 1 | | | | |
| 405 | 411780-7 | KEY HOLDER 10 | | 1 | | | | |

Please order the parts with a part number.

Print Date 2018/03/22